Building Guidelines for Energy Efficiency

Electric Cooperatives of Arkansas

We Are Arkansas

www.SmartEnergyTips.org

Properly Installed Energy Efficiency Building Components and Measures are the Keys to Saving Energy Costs for Your Home.

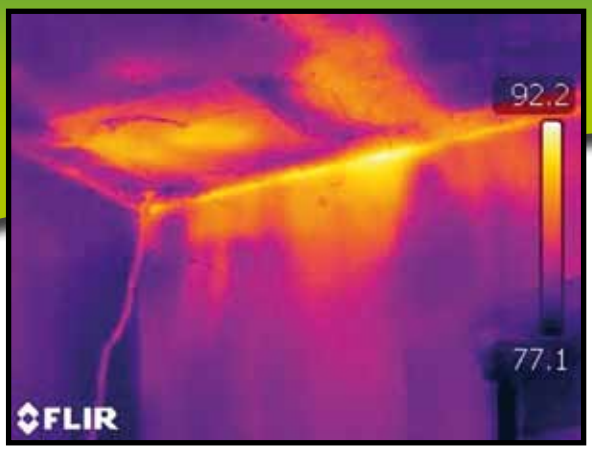

Summer heat gain from improperly installed wall and ceiling insulation. Top plate not caulked and sealed.

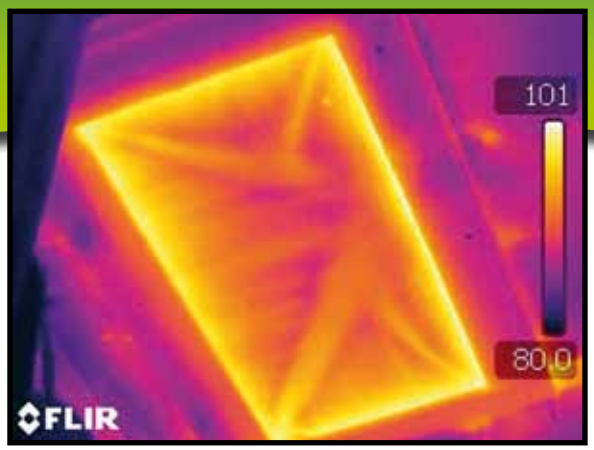

Summer heat gain from improperly installed folding attic staircase within conditioned air space.

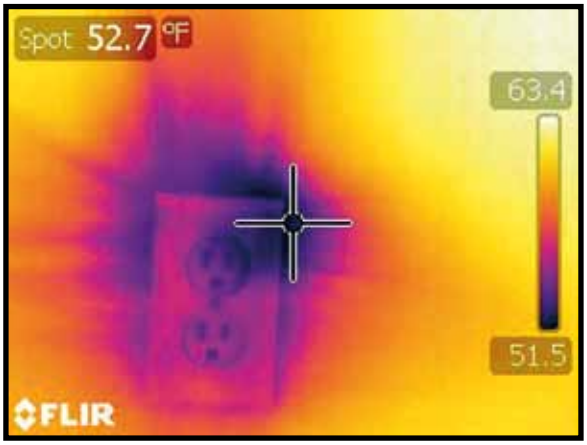

Winter heat loss from improperly installed insulation around electrical outlet.

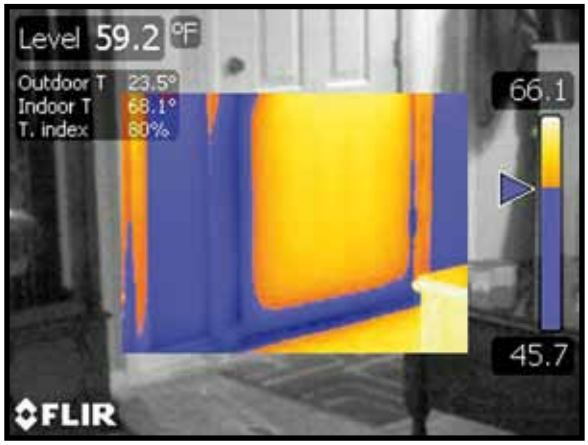

Winter heat loss from missing insulation around door. Poor door sweep.

Second Edition, 2011

Building Guidelines for Energy Efficiency

Electric Cooperatives of Arkansas

We Are Arkansas

www.SmartEnergyTips.org

CONTENTS

INTRODUCTION

This booklet was written to provide energy efficiency guidelines and measures for builders, sub-contractors and homeowners. Proper installation of these components into a new or existing home will provide energy savings, improve comfort and lower utility bills. When building a new home, it is far more cost effective to incorporate energy efficiency measures during construction than to add them in the future.

At the time of this revision, the components and measures within this booklet meet commonly accepted home energy science building practices supported by numerous industry experts.

The techniques described in the following pages are intended to work in conjunction with requirements and regulations as described by local building ordinances and codes. *However, if any discrepancies should arise, seek direction and clarification from local building professionals, inspectors and code enforcement officials.*

Contact your local electric cooperative energy adviser for additional energy efficiency resources or visit www.aecc.com.

SITE SELECTION

Careful consideration should be given to the building site when designing a new home. The site may contain natural layout and shading advantages. Ideally, a house should face north or south.

If the site's natural frontage runs north to south, creative planning and design can be used to take advantage of the sun and wind patterns.

A source of solar heating from windows can be obtained by locating major living spaces along the south side of the home. However, a minimum two-foot overhang should be used to protect against solar heat gain during summer months. Give careful consideration when making decisions about incorporating solar heat gain into your dwelling. Although the free heat from the sun is welcome on a cold winter day, unwanted and unmanaged summer solar heat gain can make your home uncomfortable and increase utility costs.

If the site requires the home to face east or west, deciduous trees should be located on the east and west sides to protect the home against summer sun. To attain higher efficiency in the winter, use less glass and door area on the north side of the house. Evergreens and shrubs will provide an excellent windbreak that may help reduce energy use during the winter months.

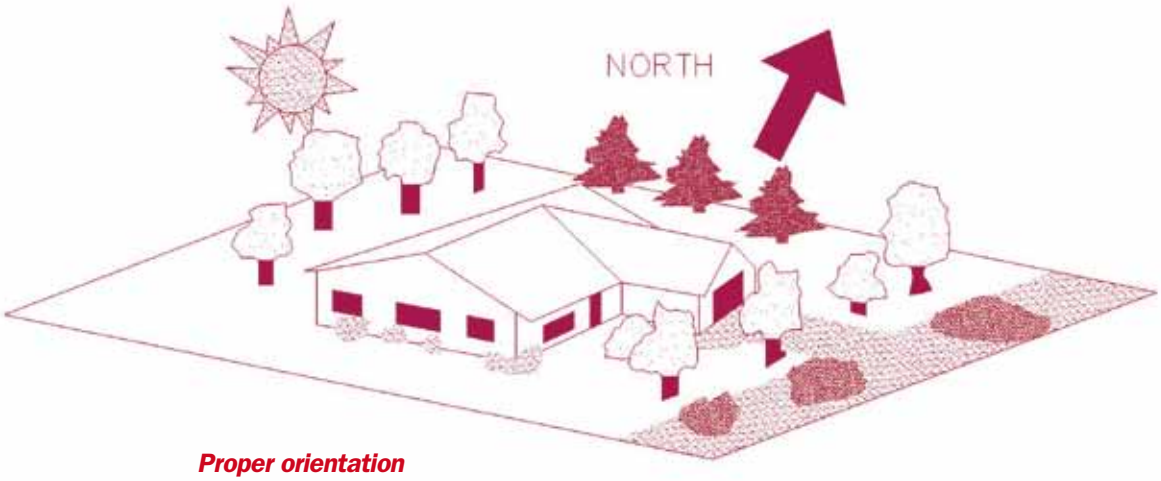

Proper orientation

BUILDING DESIGN

Energy efficiency design concepts should be considered when developing plans for a new home. Some of the more efficient designs maximize floor space while minimizing overall volume and exterior walls. A simple shape will reduce heat gain, heat loss and overall construction costs. Each additional corner and customized ceiling (cathedral, coffered and vaulted) will add to the cost of construction and increase the required BTUs (British Thermal Units) for heating and cooling.

These charts illustrate the additional square feet of sidewall space required when different shapes are designed with the same amount of floor space.

Plan A has 170 linear feet of outside wall and 1,360 square feet of outside wall space.*
Plan B has 180 linear feet of outside wall and 1,440 square feet of outside wall space.*
Plan C has an additional 240 square feet of outside wall space compared to Plan A.
Additional heating and cooling capacity would be required to condition Plan C.*

**Based on 8-foot ceilings.*

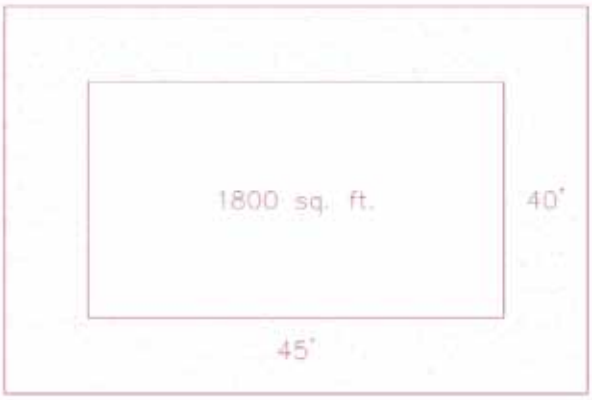

Plan A has 170 linear feet of outside wall and 1,360 square feet of outside wall space.*

Plan B has 180 linear feet of outside wall and 1,440 square feet of outside wall space.*

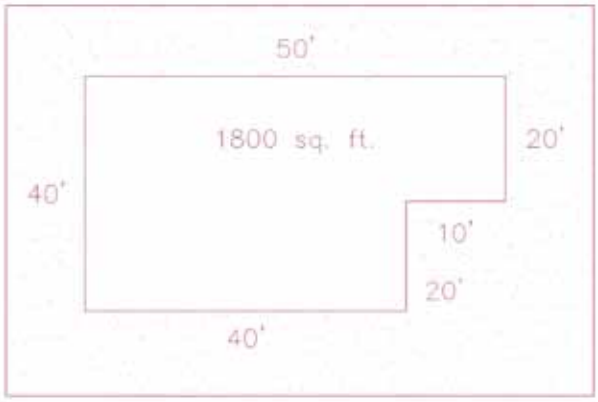

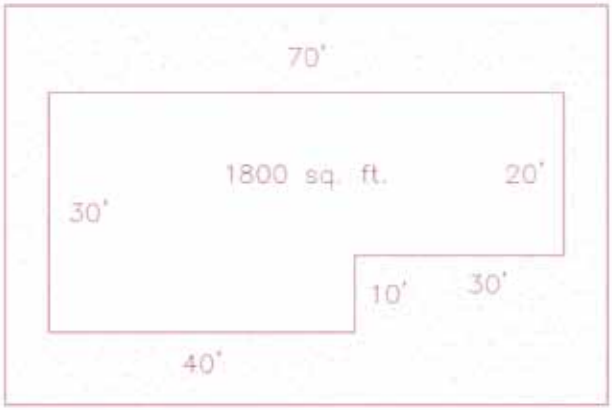

Plan C has an additional 240 square feet of outside wall space compared to Plan A. Additional heating and cooling capacity would be required to condition Plan C.*

Construction Standards

When framing exterior walls, the standards shown below are recommended. Past construction methods gave little or no consideration to corner or partition wall insulation. This *uninsulated* condition may promote the development of moisture within the wall cavity. Also, the uninsulated area does not provide a thermal barrier and promotes heat loss and heat gain. Moisture development occurs when a combination of heat loss, and/or heat gain, and the relative humidity reach certain levels. By its very nature, Arkansas' moist climate is prone to develop moisture within improperly or non-insulated components or dwellings.

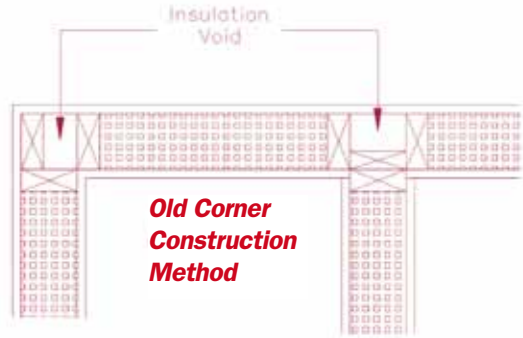

Old Corner Construction Method

Proper Tee and Corner Construction Method

Energy efficiency construction practices enable contractors to insulate these crucial points, use less framing materials and simplify the framing process.

Corner and Tee Construction for Energy Efficiency

Corners and tees are components that can affect the overall insulating performance of an exterior wall. The framing illustration shown is recommended to maximize insulation materials at corners and tees.

Energy Tee

Energy Corner

Exterior Walls

Either 2 x 6 or 2 x 4 framing can be used in energy efficiency home construction. Your choice of framing materials may affect insulation options and may restrict the ultimate R-value of the wall. A minimum R-13 is recommended.

Cellulose or foam insulation are preferred, and are important components of the ultimate R-value you wish to achieve.

Other elements which can impact the desired R-value are interior finish materials, vapor barriers, exterior sheathing products, and siding.

Headers

Headers for doors and windows located on outside walls should include Styrofoam or other rigid insulation between the two plates. All edges and corners should be caulked and sealed.

Foam Insulated Headers

INSULATION

Complete Home Insulation

Energy is a measurable quantity of heat, work or light. Two laws of thermodynamics science govern the behavior of heat on planet Earth. First, heat energy merely moves from place to place and changes form. Secondly, heat moves from high temperature regions to low temperature regions — never in reverse. So, the purpose of insulation is to slow or impede the transfer of heat from warmer areas to colder areas. During a hot summer day, heat is moving through building materials, windows, doors and air voids as it makes its way into an air-conditioned dwelling. The opposite happens on a cold winter day.

Properly installed insulation will pay for itself by reducing heating and cooling costs. Additional benefits of insulation are a significant reduction of air infiltration, noise reduction, improved comfort and energy conservation.

The three most common forms of insulation used in residential construction are fiberglass, foam and cellulose. At the time of this revision, the Electric Cooperatives of Arkansas recommend the use of *properly installed* cellulose and foam insulations. New analysis technologies, testing equipment and thermal imaging cameras are enabling certified energy auditors and infrared thermographers to objectively study insulation performance. Numerous studies, opinions and white papers are available that conclude properly installed cellulose and foam insulations outperform fiberglass insulation.

Cellulose and foam insulation not only act as excellent insulating materials, they also perform as air infiltration barriers by adequately sealing cracks and penetrations.

The term "damp-blown" cellulose insulation referenced in this publication is a process application. Regular cellulose insulation is fed through an installation machine upon which a small amount of adhesive and water are added to assure a properly dense-packed installation. Properly installed cellulose insulation dries in a few hours and will not settle over time within the wall cavity.

Cellulose Wall Insulation

Foam Wall Insulation

The industry standard for comparing insulating materials is by the thermal resistance called R-values. R-value refers to a material's resistance to heat flow, not thickness. Note the recommended levels of insulation for Arkansas in this chart published by ENERGY STAR®. The higher the insulation's R-value, the greater the insulating property. Check your local building codes for fire ratings.

YOUR HOME CONTRIBUTES TO THE QUALITY OF THE ENVIRONMENT

U.S. Environmental Protection Agency · U.S. Department of Energy

ENERGY STAR

About ENERGY STAR · News Room · FAQs · RSS

Search

Products | Home Improvement | New Homes | Buildings & Plants | Partner Resources

Home Improvement
Assess Your Home
Seal & Insulate
DIY Guide
Heat & Cool Efficiently
Join ENERGY STAR

Home > Home Improvement > Air Seal and Insulate with ENERGY STAR > Recommended Levels of Insulation

Recommended Levels of Insulation

Insulation level are specified by R-Value. R-Value is a measure of insulation's ability to resist heat traveling through it. The higher the R-Value the better the thermal performance of the insulation. The table below shows what levels of insulation are cost-effective for different climates and locations in the home.

Recommended insulation levels for retrofitting existing wood-framed buildings

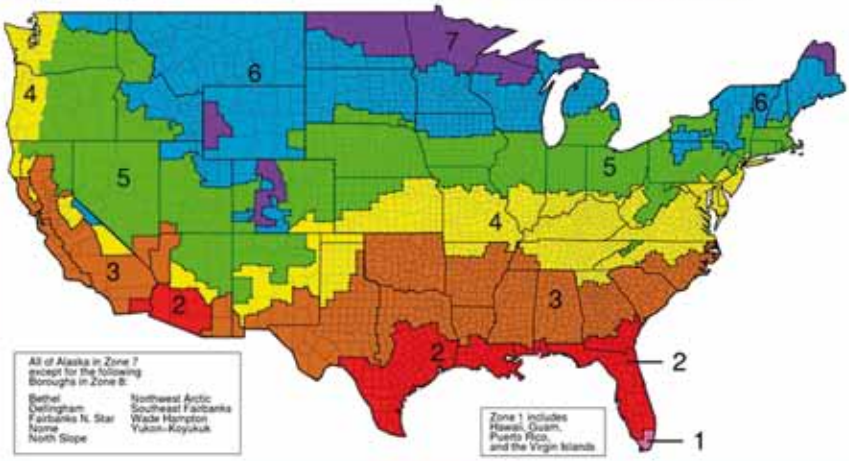

Zone	Add Insulation to Attic		Floor
	Uninsulated Attic	Existing 3–4 Inches of Insulation	
1	R30 to R49	R25 to R30	R13
2	R30 to R60	R25 to R38	R13 to R19
3	R30 to R60	R25 to R38	R19 to R25
4	R38 to R60	R38	R25 to R30
5 to 8	R49 to R60	R38 to R49	R25 to R30

Wall Insulation: ***Whenever exterior siding is removed*** on an

Uninsulated **wood-frame wall:**

- Drill holes in the sheathing and blow insulation into the empty wall cavity before installing the new siding, and
- Zones 3–4: Add R5 insulative wall sheathing beneath the new siding
- Zones 5–8: Add R5 to R6 insulative wall sheathing beneath the new siding.

Insulated **wood-frame wall:**

- For Zones 4 to 8: Add R5 insulative sheathing before installing the new siding.

Recommended Insulation Levels

Using Infrared Technology

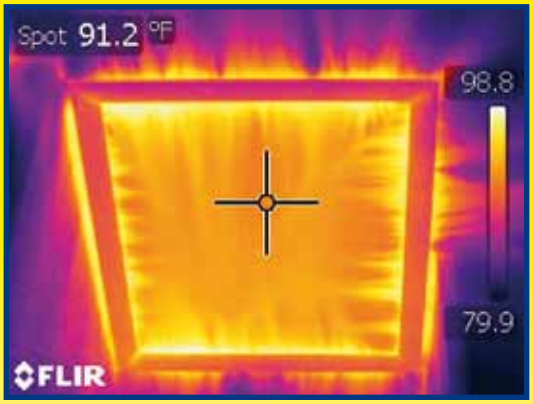

Attic Access or Scuttle Hole

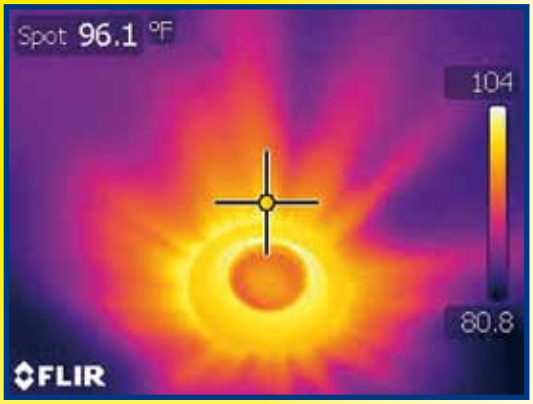

Old Style Recessed Can Light Fixture

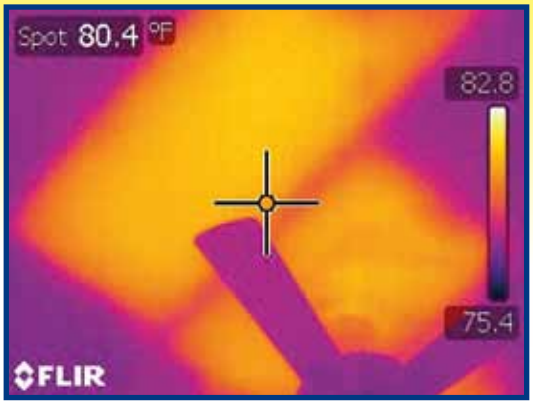

Missing Fiberglass Insulation in Attic

Infrared thermal imaging is a indispensable tool in the "home science" field. Thermograms display heat energy as visual images and confirm areas of heat gain or heat loss. Thermograms like the ones shown reveal common problems found in many homes across America. The construction components within this booklet are designed to impede and slow the transfer of heat in residential dwellings.

An infrared camera detects heat nearing 130 degees. The heat is moving from a hot rooftop through improperly installed fiberglass insulation into an air-conditioned dwelling.

Image and Object Parameters	
Camera Model	FLIR B360_Western
Image Date	8/12/2010 4:57:30 PM
Image Name	IR_0589.jpg
Emissivity	0.95
Reflected apparent temperature	70.0 °F
Object Distance	12.5 ft

Text Comments

Description	
Temperatures in excess of 112 degrees were recorded inside the dwelling at joints and areas of improperly installed fiberglass insulation. Some areas were noted reaching 120 degrees.	Furred-down ceiling below a shed-style roof. Double layered 6" (improperly installed) fiberglass batts. Temperature recorded on shed roof over 160 degrees. Roof is south-west facing. Room temperature is hot, uncomfortable and has high humidity level.

Ceiling insulation should meet the R-38 minimum requirements. Blown cellulose is recommended and should be approximately 12-14 inches in depth to equal R-38. Many builders in Arkansas are now increasing ceiling insulation to an R-45 level. Make sure to incorporate proper attic ventilation.

Cathedral Ceilings

Conventional construction required cathedral ceilings to have insulation, a vapor barrier and adequate ventilation similar to the illustration. This type of construction enabled convective ventilation to prevent potential moisture development from heat loss during the winter or heat gain during the summer. One must incorporate this method if using *fiberglass* insulation. As mentioned previously, the Electric Cooperatives of Arkansas do not recommend the use of fiberglass insulation in a retrofit or new home construction … especially on cathedral ceilings.

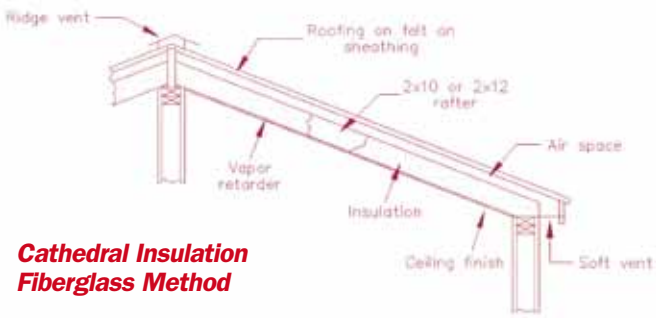

Cathedral Insulation Fiberglass Method

Home building experts now treat cathedral ceilings like a diagonal wall. Think of an "A-framed" house. It's nothing other than two walls inverted and used as a roof. Constructed properly, the need for vapor barriers and ventilation is no longer necessary. And thanks to damp-blown cellulose and foam insulation products, the ceiling cavity can be completely filled and eliminate the factors that cause the development of moisture. The "complete-fill" or "cathedralized" insulation method for cathedral ceilings must be installed properly or moisture issues might develop.

Complete Fill or Cathedralized Foam Insulation

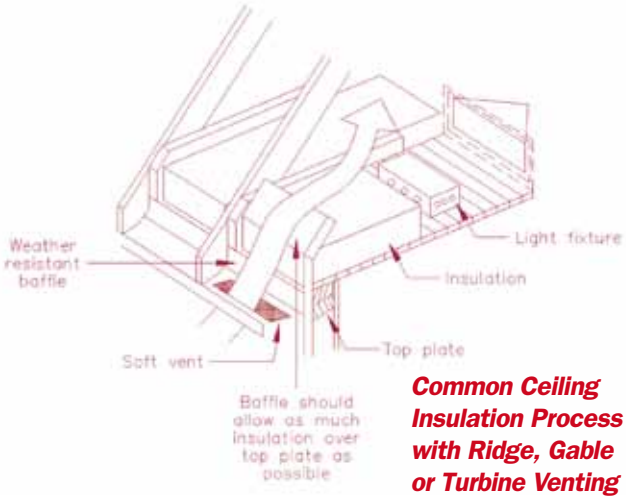

Common Ceiling Insulation Process with Ridge, Gable or Turbine Venting

Damp-Blown Cellulose Insulation

Expanding Foam Insulation

Exterior Walls

For exterior walls of conditioned air spaces, insulate to an R-value of 13 or greater. An R-13 value can be obtained with standard 2 x 4 framing construction and proper installation of damp-blown cellulose or foam insulation. Properly installed cellulose or foam may actually increase the minimum R-13 thermal value while dramatically reducing air infiltration.

Expanding Foam Insulation Sprayed on Floors

Floors

Floors over vented crawl spaces or unconditioned basements should be insulated. A minimum R-value of 19 is recommended. A common misconception is that heat rises. *Warm air rises*; heat travels in all directions, continually seeking cooler areas. Uninsulated floors become a point of least resistance for heat to travel.

One of the easiest methods for insulating floors over crawl spaces is the application of expanding foam insulation. The product is sprayed against the underside of the floor, joist cavity and stem walls.

Crawl Spaces and Perimeter Walls

Crawl space perimeter walls can be insulated with one to two inches of rigid foam board properly applied to the interior side of the block with adhesive, or with one to two inches of damp spray cellulose. The insulation should not come closer than three inches to the ground for termite inspection purposes. However, at the time of this revision, termite companies are reviewing the continuation of this practice since concrete block, treated bottom plate lumber, properly manufactured cellulose insulation and foam insulation are not considered food sources for termites. Contact your termite company for clarification.

A vapor barrier should also be installed over 100 percent of the ground area. In other words, there should not be any exposed ground within the crawl space. A seamless 6-mil or thicker polyethylene cover is recommended.

Closed Cell Foam Insulation Sprayed on Crawl Space and Perimeter Walls

Concrete Slab Floors

Concrete slab floors should have a minimum one-inch thick waterproof insulation board between the entire outside edge of the slab and foundation. This should extend vertically at least four inches and 24 inches horizontally under the slab. Basement floors less than two feet below ground level should also be insulated in this manner.

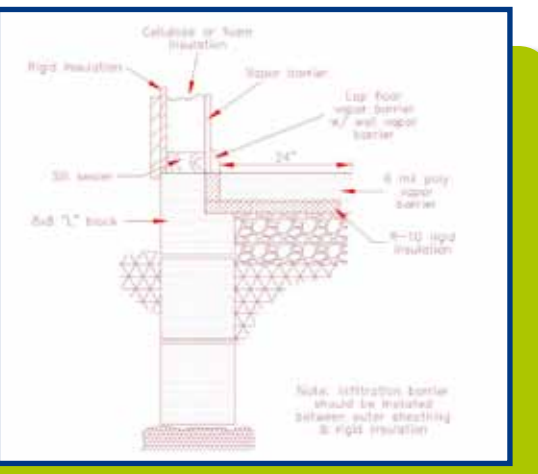

Properly Installed Concrete Slab

Rigid Foam Slab Insulation

Basement Walls

If a basement area is to be used as a living or work area, the interior walls should be framed and insulated to meet a minimum R-value of 13.

Damp blown cellulose or foam insulation should be installed between the studs in a basement wall with the type of finish illustrated. The framing lumber will determine the amount of insulation that may be installed. Unexposed walls, as well as exposed walls, need to be insulated.

Note: Be sure to insulate the area where the floor joist and sill header meet.

Rigid foam board insulation is commonly used in work and unfinished areas. It may be glued to the walls or attached to wood studs or furring strips. The extruded polystyrene is preferred over the molded beads type of polystyrene insulation.

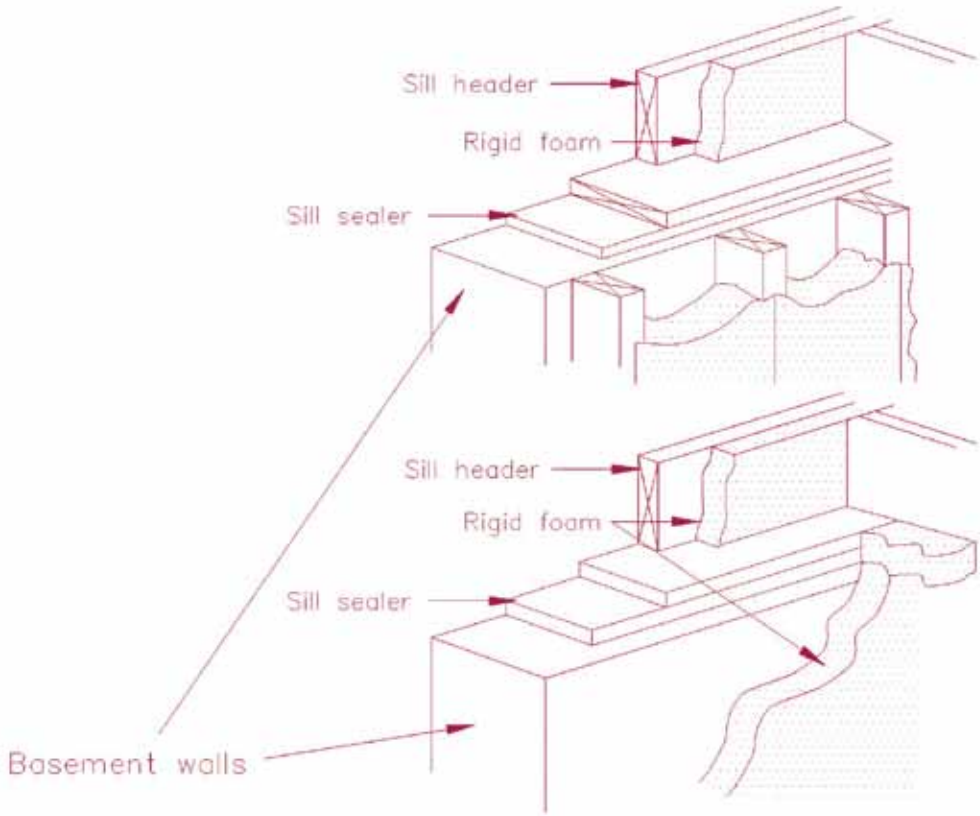

WINDOWS AND DOORS

Windows

Windows are used for many reasons – to allow sunlight and warmth to enter the home, introduce fresh air, view the outdoors, to add beauty and style to the home and more. However, the reality is windows generally have low R-values and can be a home's largest source of significant energy loss. In an energy-efficient home, the glass should be kept to 10 percent or less of the total wall area and should never exceed 20 percent.

Windows should be selected according to the following properties, listed from best to worst.

Frame

1. Wood or vinyl
2. Metal with a thermal break in frame.
3. Metal without thermal break in frame. *(These are energy wasters.)*

Glazing

1. Triple pane with Low-E glass.
2. Triple pane.
3. Double pane with Low-E glass. *(Usually the best value.)*
4. Double pane.

NFRC Label

It can be difficult and confusing for homeowners to determine whether energy efficiency and quality features are present in a window. For this reason, we recommend that you look for the National Fenestration Rating Council (NFRC) rating label on the window. This label will enable you to compare the energy efficiency features of different window brands. Also, do not let a window brand name be your only determining factor. Without diagnostic equipment, one of the only ways for consumers to confirm the energy efficiency characteristics of a window is the NFRC label. Most all major brand name window manufactures make less efficient, low-cost windows. Compare NFRC labels to guarantee you are getting an efficient window. Furthermore, always ask to see the NFRC label. If the window does not have the NFRC label, or the salesman cannot provide one, there is a possibility that window may not be energy efficient.

When comparing NFRC labels, look for windows with Low-Emissivity (Low-E) and a U-factor of .35 or lower. Also look for windows with a Solar Heat Gain Coefficient (SHGC) of .30 or lower. The lower the U-factor and SHGC, the more efficient the window will be. Since Arkansas is located in a moist, warm climate, properly installed and sealed, Low-E, low U-factor and SHGC windows can make a significant reduction in heating and cooling costs. The Low-E reflects the sun's radiant heat during hot summer months. Both Low-E glass and low U-factor windows help reduce heat gain through the glass during summer months and retain heat in the house during winter months. A low SHGC helps block heat generated from the sun.

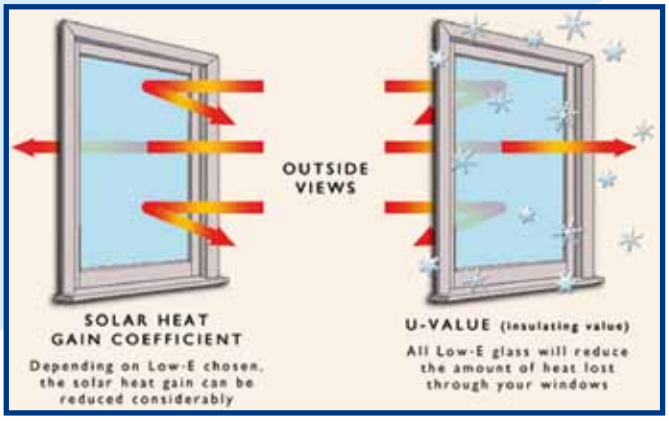

Solar Heat Gain and U-Value Illustration

Doors

All doors opening to the outside or into an unconditioned area, such as a garage, should be insulated. Insulated metal and fiberglass doors with urethane foam core are recommended. Storm doors can be added but only marginal gain will be realized, with the exception of wood doors. Care should be taken when storm doors are added to metal doors with a western exposure due to excessive solar heat build-up. If French doors are preferred, use those with one side fixed and with a high energy efficiency rating.

Cross Section of Energy-Efficient Door

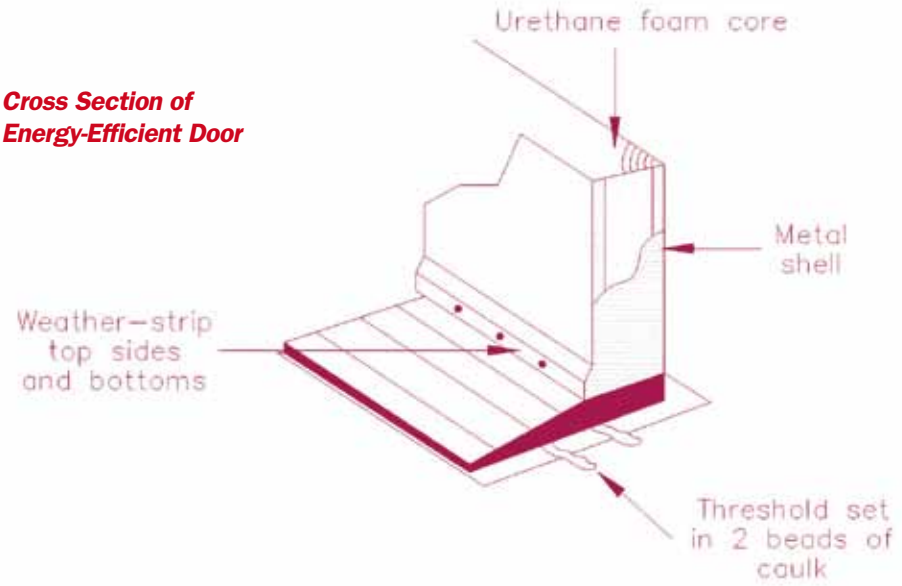

AIR INFILTRATION

Air infiltration is unwanted and unmanaged air movement that adversely affects home comfort and drives up energy related costs. Numerous studies by residential energy efficiency experts pinpoint air infiltration as the biggest source of energy waste in American homes today. No home is built airtight; however, the movement of air into and out of homes can be reduced, controlled and managed.

Air moves through any unsealed cracks or gaps associated with normal construction. These areas include cracks in framing, under base plates, top plates, around duct registers, through holes for electrical and plumbing services and especially around windows and doors.

Caulking can substantially reduce air infiltration. A high quality brand of silicone acrylic latex caulk is recommended. Properly installed house-wrap may also reduce infiltration. The material is applied on the outside of a framed wall between the wall and siding. It is also an excellent means of sealing around doors and windows. The wrap is not a vapor barrier.

Caulking and Sealing of Top and Bottom Plates, and Electrical Penetrations

Caulking, foam sealants and house-wraps are very good and relatively inexpensive ways to reduce your heating and cooling bills. They also help you get the most comfort for your energy dollars. Apply caulking from the inside of a framed dwelling prior to the installation of the insulation and sheetrock components.

It is recommended that all electrical, plumbing and outside penetrations into the home be caulked and sealed to prevent outside air infiltration. Since all homes are unique and different, the following is a general list of areas to focus upon. When in doubt, caulk it.

a. **All penetrations** (wiring, plumbing, etc.) into all wall cavities should be caulked and sealed, including through the top and bottom plates of the wall cavity.

b. **Windows and doors** should be caulked and sealed with low-expansion foam specifically designed for those applications.

c. **Foam** should be used between the **box sill** and **foundation or basement wall**.

d. **Bottom plate** should be caulked to the sub floor.

e. **All headers** should be caulked and sealed into place.

f. **House wrap** should be installed under siding.

g. **Double top plates** and studs should be caulked.

A blower door system is a diagnostic tool designed to measure the airtightness of buildings and to help locate unwanted air infiltration.

Blower Door System

VENTILATION

Air can enter the home through infiltration, opening doors and windows, or from mechanical ventilation. Natural ventilation refers to the entry of air through intentional openings such as doors, windows and vents. Mechanical ventilation is the intentional removal of indoor air or introduction of outdoor air using a fan or blower.

As mentioned previously, it's virtually impossible to create an airtight home. However, some building codes may require mechanical ventilation if a blower-door test reveals .30 (30%) natural air changes per hour or lower. Visit www.ashrae.org for comprehensive details pertaining to ventilation and indoor air quality.

Attic Ventilation

Ventilating attic space to allow warm, moist air to escape is important. With no vapor barrier, at least one square foot of vent opening for each 150 square feet of floor area is necessary. If your vent has 1/8" or 1/4" wire mesh over it, it should be 1 1/4 times as large as the basic size. If it is covered by 1/4" mesh and a louver, it should be twice as large for proper ventilation.

If you have a vapor barrier, there should still be one square foot of free vent opening for every 300 square feet of attic floor. One half of the vents should be located near the roof ridge, and one half of the vents located near the soffit. These vents should be located so that half of the vents are low and half are high.

Inadequate ventilation and insulation or closing attic vents may cause:

- Mildew and wood rot of roof joists
- Condensation in the attic that robs insulation of R-value
- Water stains on interior ceiling
- Frost during winter months

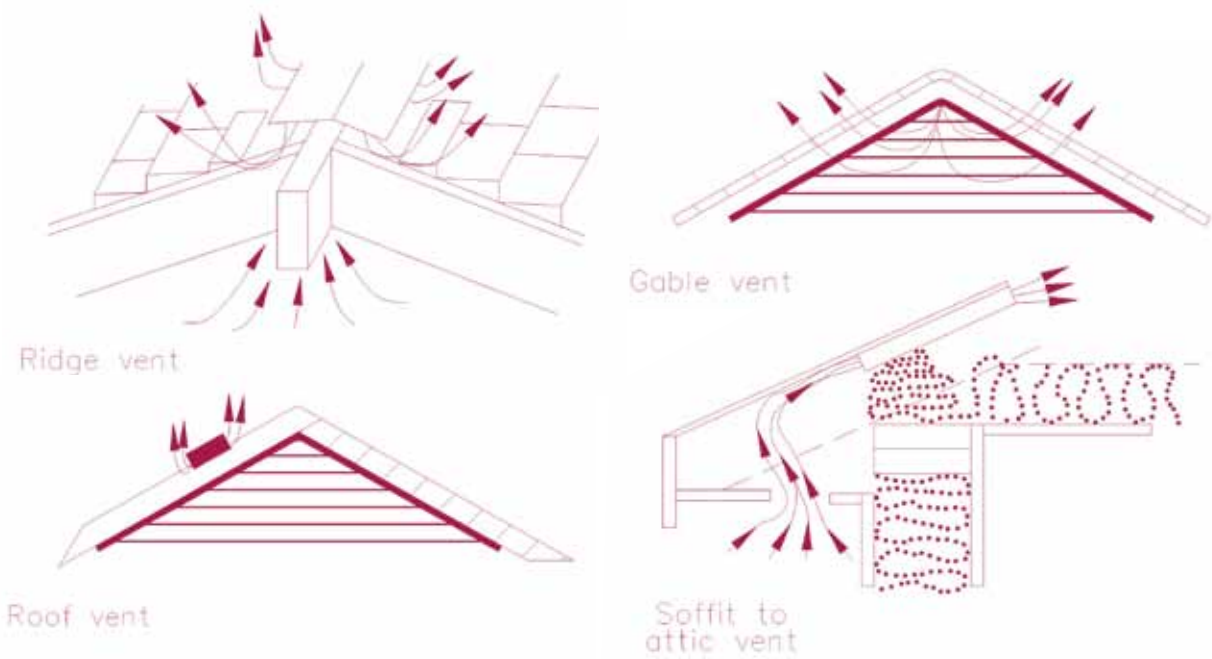

Recommended Ventilation Methods

Crawl Space Ventilation

At the time of this revision, there is developing research that indicates a tightly sealed crawl space is far more energy efficient than those with open ventilation. One theory suggests enabling cold outside air into the craw lspace during the winter increases winter heating bills. Conversely, the hot air from summer increases cooling bills. In southern climates, allowing hot and cold air into the crawl space may introduce moisture into the home. Also, open crawl spaces may cause condensation on uninsulated ductwork and promote mold growth.

Crawl spaces cannot be tightly sealed if there is constant or recurring moisture from natural springs, water leaks, drainage, etc. Building codes may require ventilation, so always be sure to verify with local code enforcement before sealing the crawl space.

If a crawl space must or is required by local code to be ventilated, locate vents as high as possible from ground level and close to the bottom of the joists.

Crawl space vents are typically 16 inches by 8 inches and have a net-free area of 64 square inches. The vents should be spaced far enough apart to provide for effective cross-ventilation.

If a ground cover is provided, one square foot (144 square inches) of net-free vent area for each 1,500 square feet of crawl space is sufficient, but more vents are desirable. Four vents, two each on opposite sides of the house, provide minimum ventilation.

If no ground cover is provided, the vent area should be increased to one square foot (144 square inches) of net-free vent area for every 150 square feet of crawl space.

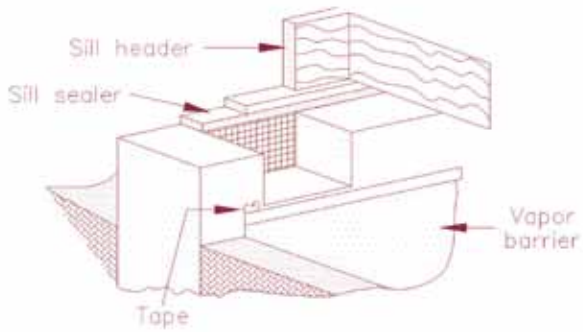

Cross Section of Crawl Space Ventilation

Kitchen and Bath Ventilation

All exhaust fans should be vented to the *outside, not the attic*, and should be equipped with a back draft damper. Humidity-sensing exhaust fans should be installed in all bathrooms and always vented to outside.

General Ventilation

Vent all clothes dryers to the outside.

Insulate long runs of ventilation ducts, especially through an attic, to reduce moisture condensation within the duct.

Radiant Barrier

Radiant barriers are materials installed in buildings to reduce summer heat gain and winter heat loss. They also reduce heating and cooling energy usage. The potential benefit of attic radiant barriers is primarily in reducing air-conditioning cooling loads in warm or hot climates.

Radiant barriers work by reducing the heat transfer from thermal radiation across the air space between the roof deck and the attic floor, where conventional insulation is usually placed. Radiant barrier roof decking works by reducing the amount of radiant heat on the attic insulation. Since the amount of radiation striking the top of the insulation is less than it would have been without a radiant barrier, the insulation surface temperature is lower and the heat flow through the insulation is reduced.

Radiant Barrier Roof Decking

It's not uncommon during an Arkansas summer for temperatures to reach near 160 degrees on the south facing side of an asphalt-shingled roof. Without radiant barrier roof decking, attic temperatures may approach temperatures near the actual external roof temperature. Installing radiant barrier roof decking can reduce the temperature in the attic up to 50 degrees. The reduction in heat gain is very important if ductwork is located in the attic.

HUMIDITY AND VAPOR BARRIERS

The human body is fairly comfortable with a minimum relative humidity of 20 percent and maximum of 50 percent. An average level of 35 percent to 50 percent is recommended for maximum comfort. Low levels of humidity can cause dry skin, aggravate respiratory ailments, dry out furniture and woodwork, and require higher heating temperatures to satisfy occupants of the house and to control static electricity.

High levels of humidity can impair insulation effectiveness, cause condensation at windows, and cause structural rotting of joists and framing.

As outside temperature drops, the humidity level in the home decreases. Also, a home with low air infiltration may have higher humidity levels.

To increase humidity in your home:

- **Install a humidifier.**
- **Properly install glass doors and damper in fireplace.**
- **Install tight fitting storm sash around windows and doors.**
- **Properly install vapor barriers during construction.**

To decrease humidity in your home:

- **Install an electric air conditioner.**
- **Install a dehumidifier.**
- **Install adequate exhaust fans for kitchen, bath and laundry areas.**
- **Install humidity-sensing exhaust fans in bathrooms.**
- **Properly ventilate clothes dryer to outside.**
- **Increase mechanical ventilation.**

Homes with one or more of the following conditions are more likely to experience increased humidity levels:

- Less than 800 square feet of living areas.
- Less than 250 square feet per occupant.
- Tight wall or ceiling construction, weather-stripping on windows and doors.
- Heating systems that use outside combustion air.
- Low-sloped roofs or unvented attics.
- Gas ranges, unvented gas stoves and gas logs, other gas-fired appliances.
- Crawl spaces with no ground cover.

Vapor Barriers

A vapor barrier is a material with high resistance to moisture flow. By definition, it should have a rating of 1.0 perms or less.

Using fiberglass insulation may cause excessive moisture in your home. Moisture can filter through insulation, causing it to become damp and matted. Wet insulation loses its effectiveness. A good vapor barrier installed on the inside of exterior walls will protect the insulation from moisture in your home.

Although a vapor barrier will protect insulation, it will also increase the humidity level in your home. With a properly installed vapor barrier, humidity control becomes essential. *In most cases, a vapor barrier is not necessary or recommended when cellulose or foam insulation are properly installed in the walls.*

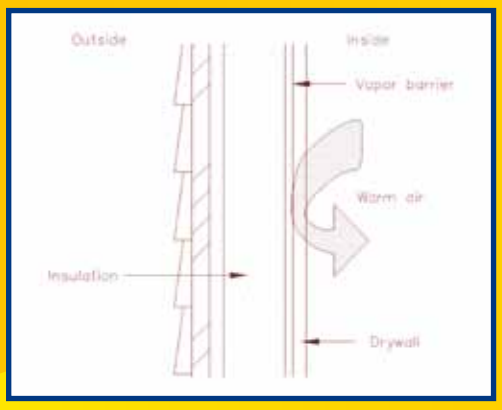

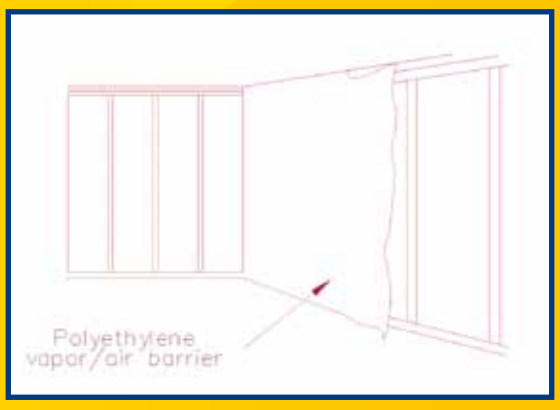

Concrete Slab

Apply a 6-mil polyethylene plastic film to the ground area before the slab is poured. Lap material six inches and away from the direction of the concrete pour.

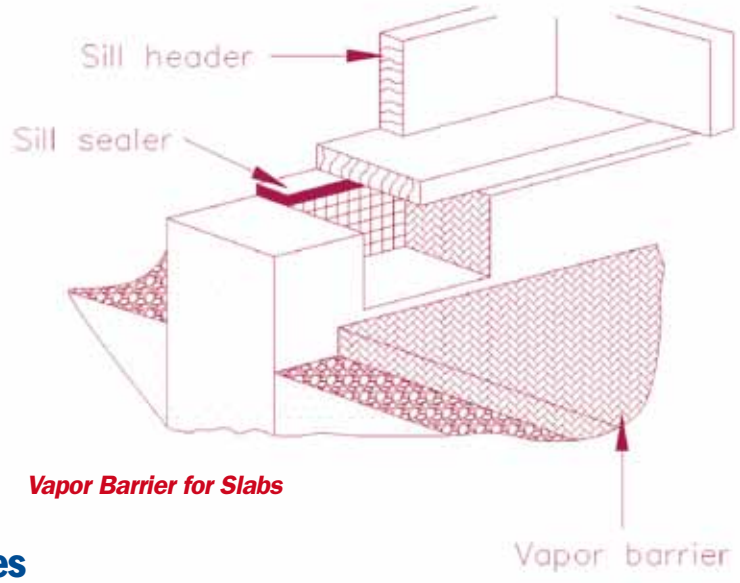

Vapor Barrier for Slabs

Crawl Spaces

If you are insulating the floor over an unheated crawl space, lay 6-mil polyethylene film on the ground to keep the moisture from moving into the house. Extend the plastic sheet several inches up the walls and fasten. Overlap and anchor adjoining pieces.

BLOWER DOOR TESTING

While following the recommendations in this guide will reduce the amount of air leakage or infiltration, some sources of leakage are extremely difficult to locate. Homes can be tested for leakage with a device called a blower door system. Blower door testing involves depressurizing the home to artificially increase the amount of leakage. Leakage can be readily identified and sealed. The blower door also provides an assessment of the home's overall tightness. A similar process using a duct-blaster is used to test for duct system leakage. Duct leakage has been identified as a serious problem in many areas of the country.

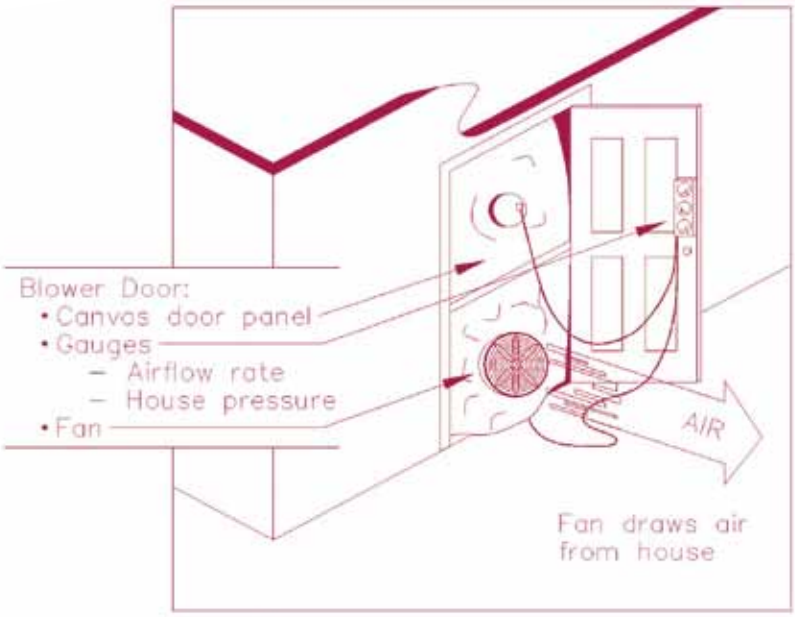

Blower Door Testing is Used to Measure the Amount of Air Leaking in a Home

HEATING AND COOLING

A major decision when building a new home is the type of heating and cooling system to install. Most contractors and homebuilders using electricity as their choice for heating and cooling are selecting heat pumps. Two types of heat pumps available on the market today are geothermal and air source.

Geothermal Heat Pump

The most economical heating and cooling system available today is the geothermal heat pump.

Ground source or geothermal heat pumps use the earth as a giant heat sink. By circulating a water and antifreeze solution through a series of high-density polyethylene pipes buried in the ground, the ground source system uses the earth's constant temperatures as a pre-heating and pre-cooling cycle. The compressor and mechanical equipment provide the balance of heating and cooling required. The result is a system that will deliver from three to five units of warm, comfortable heat for every unit of electricity consumed. The piping loop can be buried in the ground either horizontally or vertically.* Lake loops and well water systems are additional ways of installing a loop system.

Geothermal heat pumps can also provide free domestic hot water from a de-superheater feature while in the air conditioning mode. They can also be equipped to provide year-round hot water at a substantially reduced cost compared to a conventional water heater.

*Vertical Loop Ground System

Typical Vertical Installation

- one loop per ton
- each loop 10-15 feet apart and 150-200 feet in depth

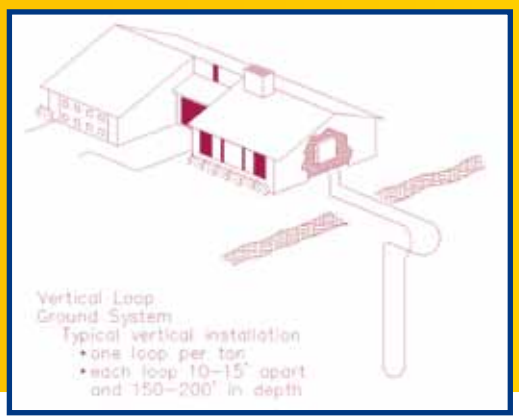

Vertical Loop Installation to 240' Depth

*Horizontal Loop Ground System

Typical Horizontal Installation

- 500-600 feet of pipe per ton
- 200-300 feet of trench per ton

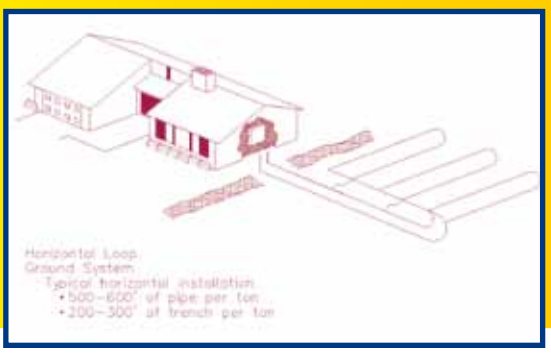

Horizontal Loop Installation

Air Source Heat Pump

Air Source Heat Pump

The air source heat pump operates on the same principle as the geothermal heat pump except the air source heat pump extracts heat from the outside air. It provides comfortable and affordable heating and cooling all in one unit. Efficiencies are stated in terms of SEER, Seasonal Energy Efficiency Radio; and HSPF, Heating Seasonal Performance Factor. Units with a SEER of 13 or greater and HSPF of 8.5 or greater are recommended.

Regardless of the type of heating and cooling system you install, *it is critically important to have the unit properly sized* for your particular home. Bigger is not better!

Your electric cooperative or a reputable heating, ventilation and air conditioning (HVAC) contractor can assist you in properly sizing your heating and cooling system.

For more information on a variety of heating and cooling systems, contact the member services department at your electric cooperative. Cooperative staff will be happy to provide you with additional information, brochures and a list of local, qualified dealers. They can also provide you with information on operating costs for your area.

Duct System

The duct system must be properly designed and sized to allow adequate and balanced airflow throughout the house and to maximize operating efficiency of the HVAC system.

It is recommended that the duct system not be placed in an unconditioned attic. Extreme fluctuations in temperature have a detrimental effect on the operating equipment. All ducts running through unconditioned areas must be insulated. Use radiant barrier roof decking if installing ductwork in an attic. If possible, the duct system should be located in the conditioned area as a furred-down design, or in a basement, crawl space or slab.

Metal Duct

The entire duct system should be constructed of metal and be made airtight with duct mastic and reinforcing tape. Never use general-use duct tape to seal and tape joints. Also, avoid using flex-duct. The duct system should also be properly insulated. Special ductwork for slab installation is now available. Contact a reputable HVAC dealer for details.

Mastic Sealed Metal Duct

HVAC-Rated Reinforcing Tape

Fireplaces

Fireplaces generally are not energy efficient; however, many modern homes have them for aesthetics and nostalgia. If you plan to include a fireplace in your home, consider adding more energy efficiency components and measures that will offset the energy loss from the fireplace.

1. ***If possible, install the fireplace on an interior wall to minimize heat loss and heat gain.***
2. ***Install an easily closed damper to seal off outside air.***
3. ***Install an outside air vent or source for proper combustion.***
4. ***Make sure you have airtight glass doors.***
5. ***Install a fireplace insert to increase heating efficiency.***

Corner Fireplace Framing Within Foam Insulated Envelope

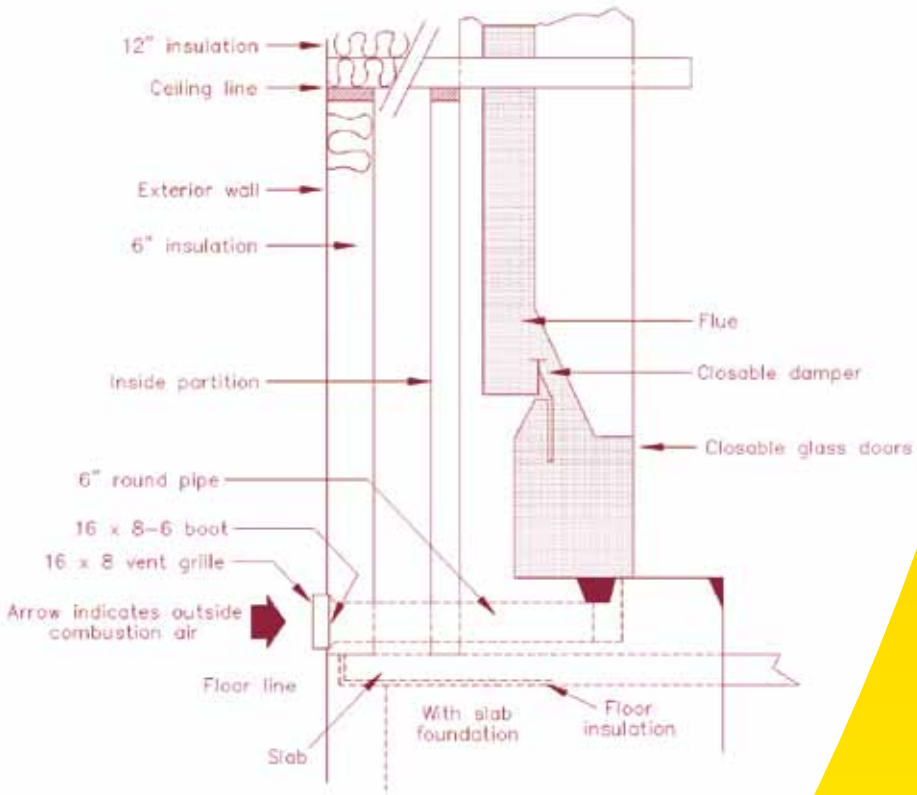

Fireplace Installation in an Energy-Efficient Dwelling

When purchasing an electric water heater, match the gallon size to the needs of your family. A 50-gallon water heater is normally adequate for an average family.

Consider installing a high energy-efficient Marathon water heater. All units have an energy factor rating of .91 to .95. They come with a lifetime warranty on the tank and are guaranteed to never leak or rust. Another option is the ultra-efficient General Electric GeoSpring Hybrid water heater. At the time of this revision, the GeoSpring was ENERGY STAR® rated with an Energy Factor (EF) of 2.35 or 235% efficiency. The GeoSpring uses heat pump technology and is considered one of the most efficient water heaters available. Contact your local electric cooperative for details about both water heaters.

Check the temperature on your water heater for additional savings. Most water heaters that are set for 120˚F can provide adequate hot water for most families.

1. **When possible, place your electric water heater on a two-inch thick rigid insulation board to insulate the bottom of the tank.**
2. **Insulate all hot water lines above and beneath your floor. Insulate hot water lines located in slab before concrete is poured.**
3. **Locate your water heater in a conditioned area of your house, preferably close to the center of the house.**
4. **Install heat traps for additional savings.**

When shopping for water heaters, always look for the bright yellow energy rating tag. Look for units that have an EF rating of .90 (90% efficiency) or higher. Also, water heaters of .90 or higher generally do not require insulating blankets.

At the time of this revision, the U.S. Deparment of Energy has proposed higher efficiency standards for water heaters. Proposed increases, if finalized and promulgated, will not take effect until 2015. When building an energy-efficient home or replacing an existing water heater, always strive to install an electric unit with the highest EF possible.

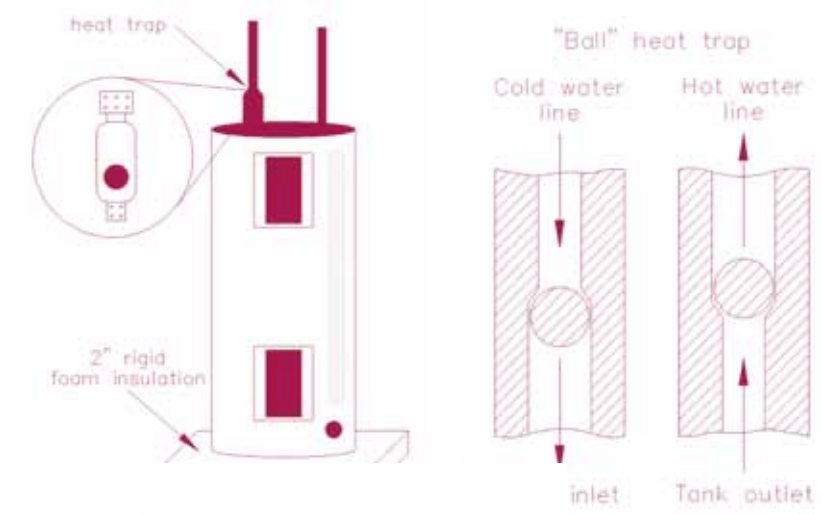

Marathon Water Heater

GE® GeoSpring Hybrid Water Heater

LIGHTING

Lighting requires planning when building a new home. Today's lifestyles and modern technology can make a big difference in the look and convenience of lighting in your home.

Lighting is part of your environment. It affects your mood, color, safety, convenience and decorative quality of your home.

Lighting can help you relax or can keep you awake. Proper planning allows you to control your home environment with lighting. Include in your lighting plan all the functional and decorative lighting you require so the wiring can be installed during construction.

Plan your switch locations properly to allow walking through the house from lighted area to lighted area without having to go back to turn off a light.

Make sure that you have plenty of outlets throughout your home, including your hall and foyer.

Plan your outdoor light controls in easily accessible locations.

Include all the areas where you may need additional lighting, such as the shower, closets, under kitchen cabinets, stairways, etc.

CFLs are Available in All Sizes and Shapes

Compact Fluorescent Lighting

A much more energy-efficient lighting option is the compact fluorescent lamp (CFL). CFLs have a little higher initial cost, but use about 70 percent less electricity than incandescent bulbs and last up to 10 times longer. They provide the same quality of light as incandescent and give off less heat. Compact fluorescents use the same principle as standard tube fluorescents, but the tube is smaller and folded over to concentrate the light.

Because of their smaller size, compact fluorescents can be used in table and floor lamps, ceiling fixtures, ceiling fans and candelabras. Compact fluorescents come in three shapes: twin-tube, globe (or cylinder) or spiral. All types need ballasts to operate, devices that alter the electric current flowing through the tube. Many come with ballasts attached, while some require that ballasts be purchased. Dimmable CFLs are also readily available.

Light Emitting Diode

LED (Light Emitting Diode) bulbs can use 20 to 50 times less energy than incandescent bulbs and may last for up to 20 years. At the time of this revision, LED bulbs are available, but are quite expensive. Much like CFLs in their genesis, LED bulbs most likely will become more available and affordable as technological advancements improve and economics affect supply and demand. As your CFLs reach their useful life, replace them with LEDs. Buying them one at a time may fit your budget.

Where applicable, only use recessed light fixtures that are rated insulated contact airtight (ICAT) and can be insulated from above.

LED Light Bulb

Insulated Contact Airtight Recessed Lighting

ICAT Recessed Lighting

Make sure that recessed lights, which are most often located in attics or vaulted ceilings, are not a source of air infiltration. This causes energy loss and leads to moisture damage of ceiling insulation, reducing its effectiveness. Invest in ICAT recessed ceiling lighting fixtures.

Known as ICAT fixtures, these recessed ceiling lights feature aluminum housings that allow them to be completely covered with insulation. They also have gaskets to seal the space between the fixture and ceiling opening. These other features reduce air infiltration, making airtight recessed fixtures the most energy efficient choice for this type of lighting. Airtight recessed lighting fixtures also come in a wide range of styles that can accommodate a variety of lamp types, including CFLs and LEDs.

Outdoor Lighting

Outdoor lighting in the form of lamp posts, sidewalk lights, floodlights and accent lights can enhance the beauty of your home and expand your family's opportunities for outdoor activities. More importantly, outdoor lighting provides extra safety and security.

For energy-efficient outdoor lighting, choose CFLs and LEDs designed for outdoor use.

When selecting lamp posts and accent lights, choose those that have a light-sensing control to provide efficient dusk-to-dawn illumination.

For security and safety, locate energy-efficient outdoor lights by all your entries, garage and driveway. Consider using solar-powered decorative lighting where applicable.

NOTES

Recommended Reading and Helpful Websites:

Residential Energy by John Krigger and Chris Dorsi

Builder's Guide to Mixed-Humid Climates by Joseph Lstiburek

www.aecc.com www.smartenergytips.org www.arkansasenergy.org
www.energystar.gov www.doe.gov

For more information, contact your local electric cooperative.

Electric Cooperatives of Arkansas

We Are Arkansas

www.SmartEnergyTips.org